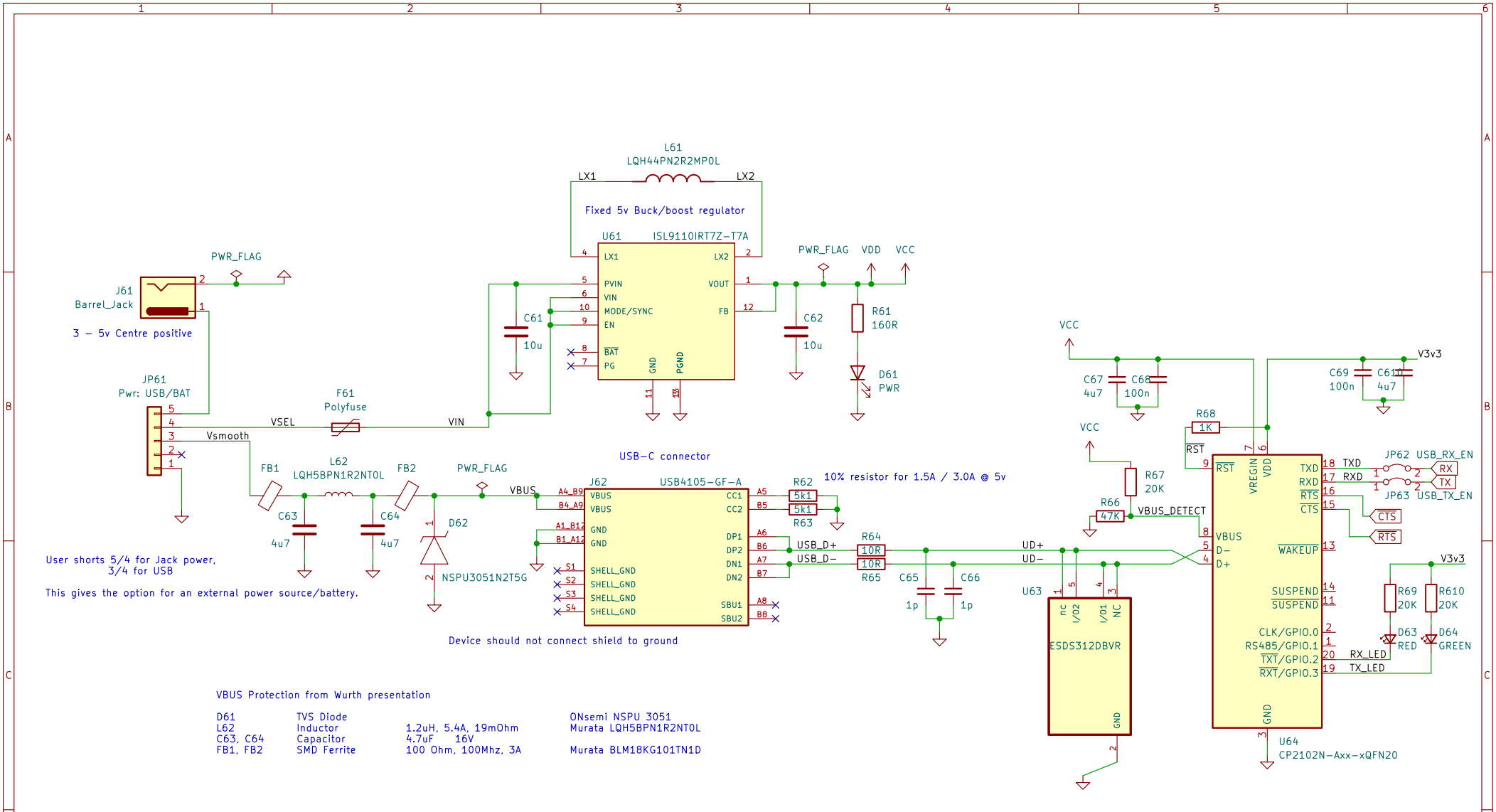

VBUS Protection from Wurth presentation

D61	TVS Diode		ONsemi NSPU 3051
L62	Inductor	1.2uH, 5.4A, 19mOhm	Murata LQH5BPN1R2NT0L
C63, C64	Capacitor	4.7uF 16V	
FB1, FB2	SMD Ferrite	100 Ohm, 100Mhz, 3A	Murata BLM18KG101TN1D

Black launch revision

Sheet: /6_Power/
File: 6_power.kicad_sch

Title: Feersum MicroBeast

Size: A4	Date: 2022-09-24	Rev: v0.2a
KiCad E.D.A. kicad (6.0.4)		Id: 6/6