Display

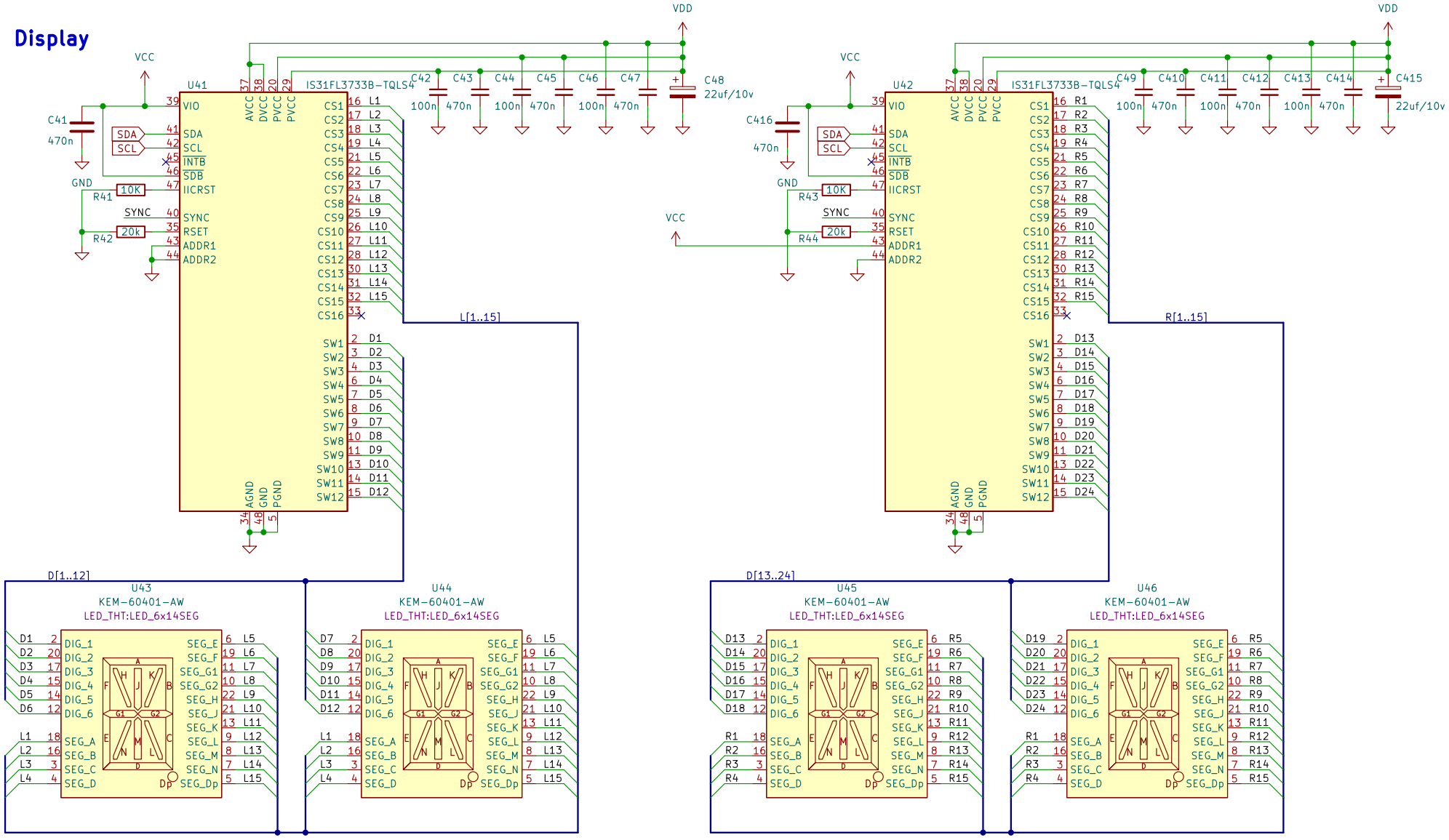

Black launch revision

Sheet: /4_Display/
File: 4_display.kicad_sch

Title: Feersum MicroBeast

Size: A4	Date: 2022-09-24	Rev: v0.2a
KiCad E.D.A. kicad (6.0.4)		Id: 4/6